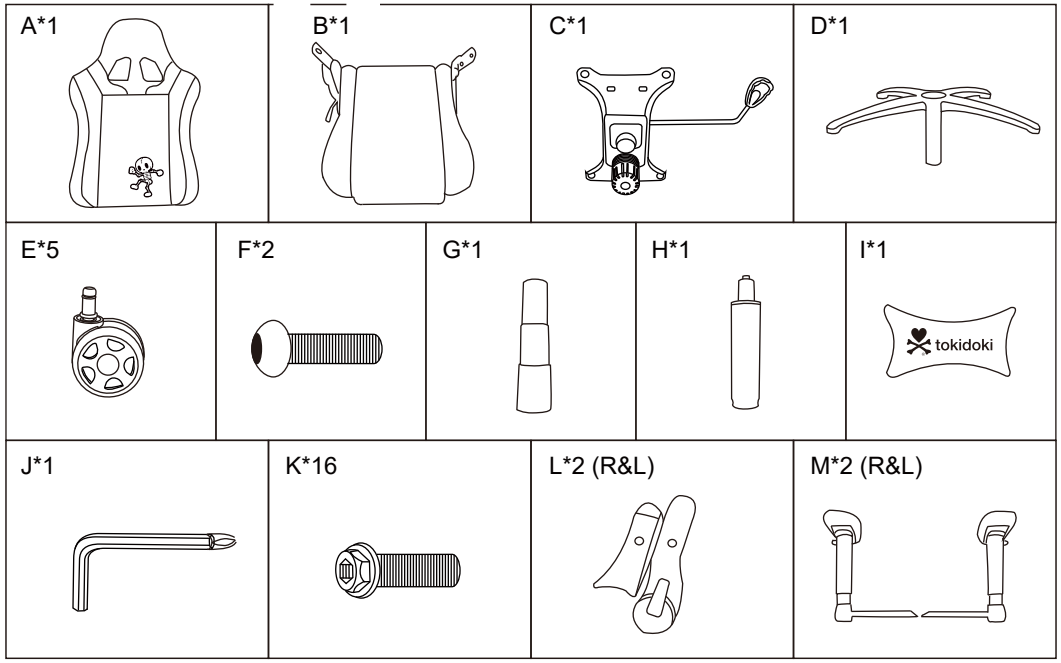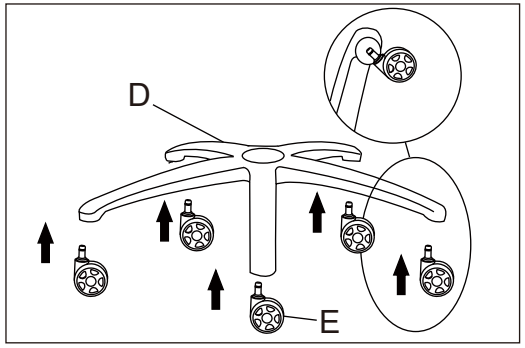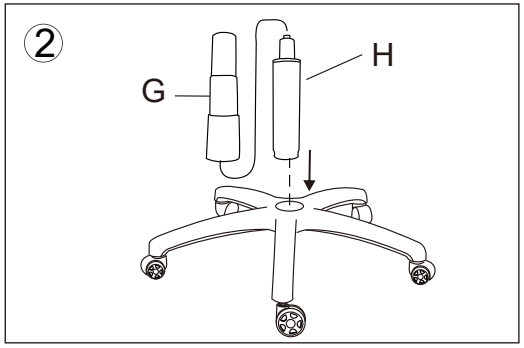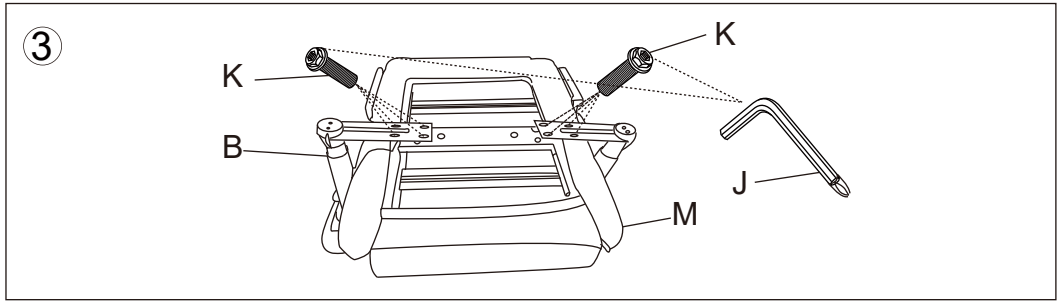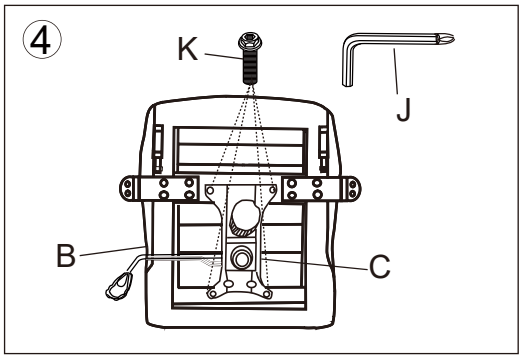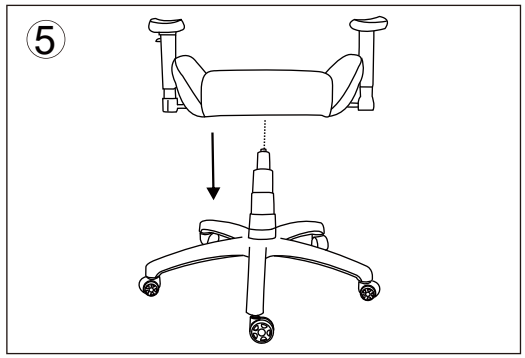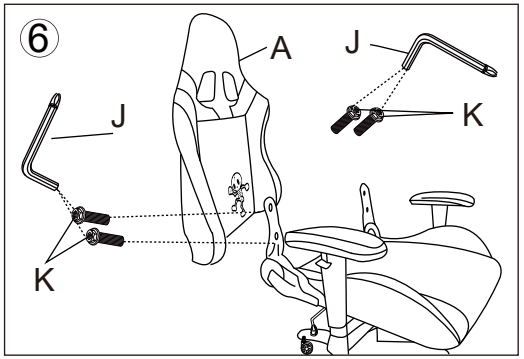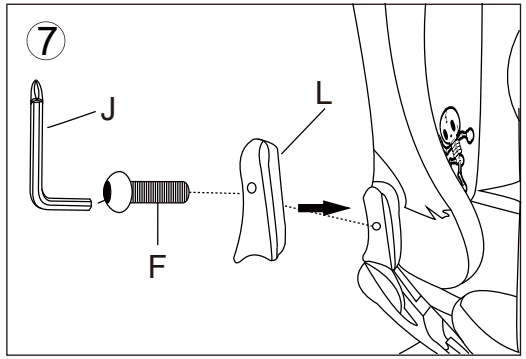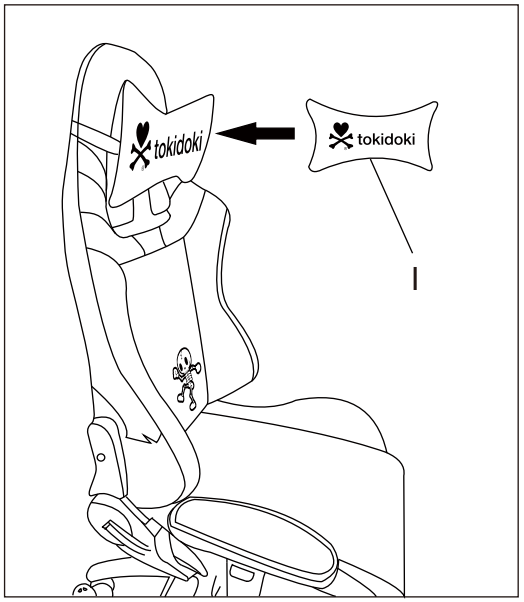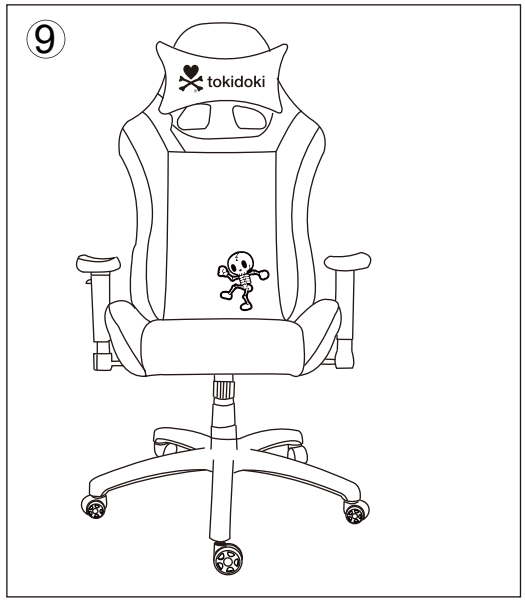TESORO® tokidoki Gaming Chair INSTALLATION